POWER STEERING COMPONENTS

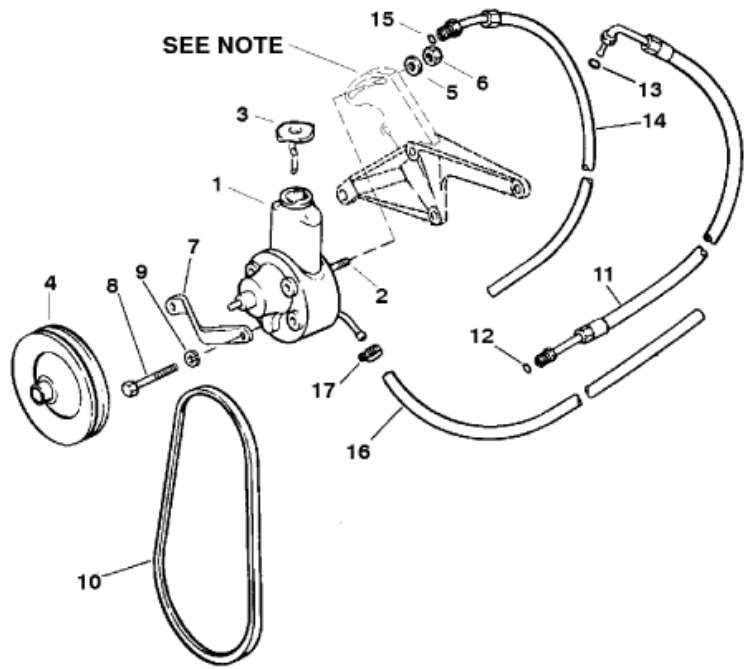

NOTE: See page 2 (Starter and Alternator) reference # 16.

Parts List

Ref	Class	Part	Description	Qty	Comment	Footnote
1		16792A 1	PUMP-Power Steering	1		
2	16	41877	STUD	2		
3	36	95805	CAP	1		
4		73873A 1	PULLEY	1		
5	23	72057	SPACER	2		
6	11	90517	NUT	2		
7		98813A 1	BRACE	1		
8	10	40001188	SCREW (M10 x 20)	1		
9	13	40024 8	LOCKWASHER (M10)	1		
10	57	812427T	V-BELT	1		
11	32	806222 16	HOSE	1	(FITTINGS ON BOTH ENDS)	
12	25	89879	O-RING	1		
13	25	806232	O-RING	1		
14	32	806221 42	HOSE	1	(FITTING ON ONE END)	
15	25	89879	O-RING	1		
16	32	52519 14	HOSE-Pump to Oil Cooler	1		
17	54	815504206	CLAMP	3		